NOTICE: This standard has either been superseded and replaced by a new version or discontinued.
Contact ASTM International (www.astm.org) for the latest information.

Designation: D 2540 – 93

Standard Test Method for Drop-Weight Sensitivity of Liquid Monopropellants[1]

This standard is issued under the fixed designation D 2540; the number immediately following the designation indicates the year of original adoption or, in the case of revision, the year of last revision. A number in parentheses indicates the year of last reapproval. A superscript epsilon (ϵ) indicates an editorial change since the last revision or reapproval.

1. Scope

1.1 This test method[2] covers the determination of the sensitivity of liquid monopropellants to the impact of a drop weight.

1.2 *This standard should be used to measure and describe the properties of materials, products, or assemblies in response to heat and flame under controlled laboratory conditions and should not be used to describe or appraise the fire hazard or fire risk of materials, products, or assemblies under actual fire conditions. However, results of this test may be used as elements of a fire risk assessment which takes into account all of the factors which are pertinent to an assessment of the fire hazard of a particular end use.*

1.3 *This standard does not purport to address all of the safety problems, if any, associated with its use. It is the responsibility of the user of this standard to establish appropriate safety and health practices and determine the applicability of regulatory limitations prior to use.*

1.4 The values stated in SI units are to be regarded as the standard. The values given in parentheses are for information only.

2. Summary of Test Method

2.1 A small sample of the liquid (0.03 mL) to be tested is enclosed in a cavity (0.06 mL) formed by a steel cup, an elastic ring, and a steel diaphragm (see Fig. 1). A piston rests on the diaphragm and carries a vent hole which is blocked by the steel diaphragm. A weight is dropped onto the piston. A positive result is indicated by puncture of the steel diaphragm accompanied by a loud noise or severe deformation of the diaphragm and evidence that the sample was completely consumed. The sensitivity value for a given sample shall be expressed as the height from which the specified weight is dropped for the probability of explosion to be 50 %.

3. Significance and Use

3.1 In drop-weight testing of liquids, explosions are initiated in a complex compression process involving the degree and rate of pressurization, the thermodynamic gas properties, heat transfer, hydrodynamic properties, etc. At this time, the fundamental significance of the test cannot be exactly defined. The test is considered useful, however, as a rapid and simple means to rate sensitive liquids as to their relative explosive sensitivity. Since it requires only a few grams of sample, it can be an important laboratory tool to determine the handling safety of new materials before substantial quantities are prepared.

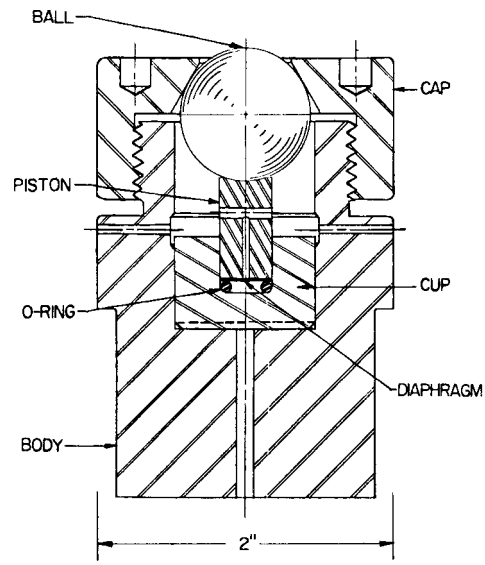

FIG. 1 Sample Cup Assembly

3.2 Tests in which the sample volume is varied (at constant cavity volume of 0.06 mL) show that the degree of filling affects the result. Note that the relationship between sensitivity rating and sample volume is not a characteristic of the test apparatus but is a function specific to each propellant. At 50 % filling (0.03 mL of sample), the dependency of sensitivity on sample volume is moderate so that the error in sample volume measurement has a negligible influence. Tests show that the delivered sample volume is reproducible to ±0.5 % when measured by a fixed-stroke syringe, and 0.03 mL shall be the standard sample volume.

3.3 If the objective justifies the greater effort, the sample volume is varied leading to a plot such as shown in Fig. 2 which represents the relationship between sensitivity rating and sample volume for the specific propellant *n*-propyl nitrate.

[1] This test method is under the jurisdiction of ASTM Committee F-7 on Aerospace Industry Methods and is the direct responsibility of Subcommittee F 07.02on Propellant Technology.

Current edition approved March 15, 1993. Published May 1993. Originally published as D 2540 – 66 T. Last previous edition D 2540 – 70 (1982)$^{\epsilon 1}$.

[2] This method is identical in substance with the JANNAF method, "Drop Weight Test," Test Number 4, Liquid Propellant Test Methods, May 1964, published by the Chemical Propulsion Information Agency, Johns Hopkins University, Applied Physics Laboratory, Johns Hopkins Rd., Laurel, Md. 20810.

Copyright © ASTM, 100 Barr Harbor Drive, West Conshohocken, PA 19428-2959, United States.