Designation: E 1304 – 97 (Reapproved 2002)

Standard Test Method for Plane-Strain (Chevron-Notch) Fracture Toughness of Metallic Materials[1]

This standard is issued under the fixed designation E 1304; the number immediately following the designation indicates the year of original adoption or, in the case of revision, the year of last revision. A number in parentheses indicates the year of last reapproval. A superscript epsilon (ϵ) indicates an editorial change since the last revision or reapproval.

1. Scope

1.1 This test method covers the determination of plane-strain (chevron-notch) fracture toughnesses, K_{Iv} or K_{IvM}, of metallic materials. Fracture toughness by this method is relative to a slowly advancing steady state crack initiated at a chevron-shaped notch, and propagating in a chevron-shaped ligament (Fig. 1). Some metallic materials, when tested by this method, exhibit a sporadic crack growth in which the crack front remains nearly stationary until a critical load is reached. The crack then becomes unstable and suddenly advances at high speed to the next arrest point. For these materials, this test method covers the determination of the plane-strain fracture toughness, K_{Ivj} or K_{IvM}, relative to the crack at the points of instability.

NOTE 1—One difference between this test method and Test Method E 399 (which measures K_{Ic}) is that Test Method E 399 centers attention on the start of crack extension from a fatigue precrack. This test method makes use of either a steady state slowly propagating crack, or a crack at the initiation of a crack jump. Although both methods are based on the principles of linear elastic fracture mechanics, this difference, plus other differences in test procedure, may cause the values from this test method to be larger than K_{Ic} values in some materials. Therefore, toughness values determined by this test method cannot be used interchangeably with K_{Ic}.

1.2 This test method uses either chevron-notched rod specimens of circular cross section, or chevron-notched bar specimens of square or rectangular cross section (Figs. 1-10). The terms "short rod" and "short bar" are used commonly for these types of chevron-notched specimens.

1.3 *This standard does not purport to address all of the safety concerns, if any, associated with its use. It is the responsibility of the user of this standard to establish appropriate safety and health practices and determine the applicability of regulatory limitations prior to use.*

2. Referenced Documents

2.1 *ASTM Standards:*

E 4 Practice for Force Verification of Testing Machines[2]

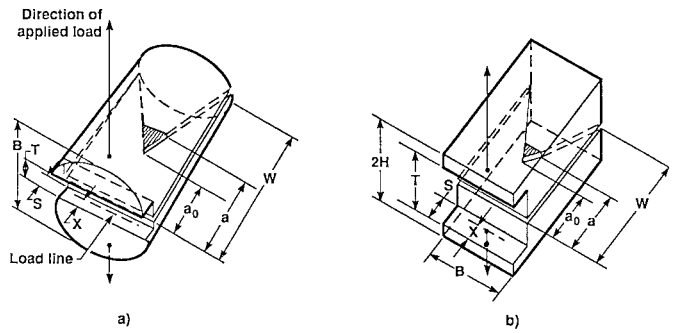

NOTE 1—The crack commences at the tip of the chevron-shaped ligament and propagates (shaded area) along the ligament, and has the length "a" shown. (Not to scale.)

FIG. 1 Schematic Diagrams of Chevron-Notched Short Rod (a) and Short Bar (b) Specimens

E 8 Test Methods for Tension Testing of Metallic Materials[2]

E 399 Test Method for Plane-Strain Fracture Toughness of Metallic Materials[2]

E 1823 Terminology Relating to Fatique and Fracture Testing[2]

3. Terminology

3.1 *Definitions:*

3.1.1 The terms described in Terminology E 1823 are applicable to this test method.

3.1.2 *stress-intensity factor,* K_I (dimensional units $FL^{-3/2}$)—the magnitude of the ideal crack-tip stress field singularity for mode I in a homogeneous linear-elastic body.

3.1.2.1 *Discussion*—Values of *K* for mode *I* are given by:

$$K_I = \lim_{r_x \to 0} \sigma_y \, [2\pi r_x]^{1/2}$$

where:

r_x = a distance directly forward from the crack tip to a location where the significant stress is calculated and

σ_y = the principal stress r_x normal to the crack plane.

3.2 *Definitions of Terms Specific to This Standard:*

3.2.1 *plane-strain (chevron-notch) fracture toughness,* K_{Iv} or K_{Ivj} ($FL^{-3/2}$)—under conditions of crack-tip plane strain in a chevron-notched specimen: K_{Iv} relates to extension resistance with respect to a slowly advancing steady-state crack. K_{Ivj}

[1] This test method is under the jurisdiction of ASTM Committee E08 on Fracture Fatigue and is the direct responsibility of Subcommittee E08.07 on Fracture Linear–Elastic.

Current edition approved Apr. 10, 1997. Published June 1997. Originally published as E 1304 – 89. Last previous edition E 1304 – 89.

[2] *Annual Book of ASTM Standards*, Vol 03.01.

This document is now PUBLIC

Copyright © ASTM International, 100 Barr Harbor Drive, PO Box C700, West Conshohocken, PA 19428-2959, United States.